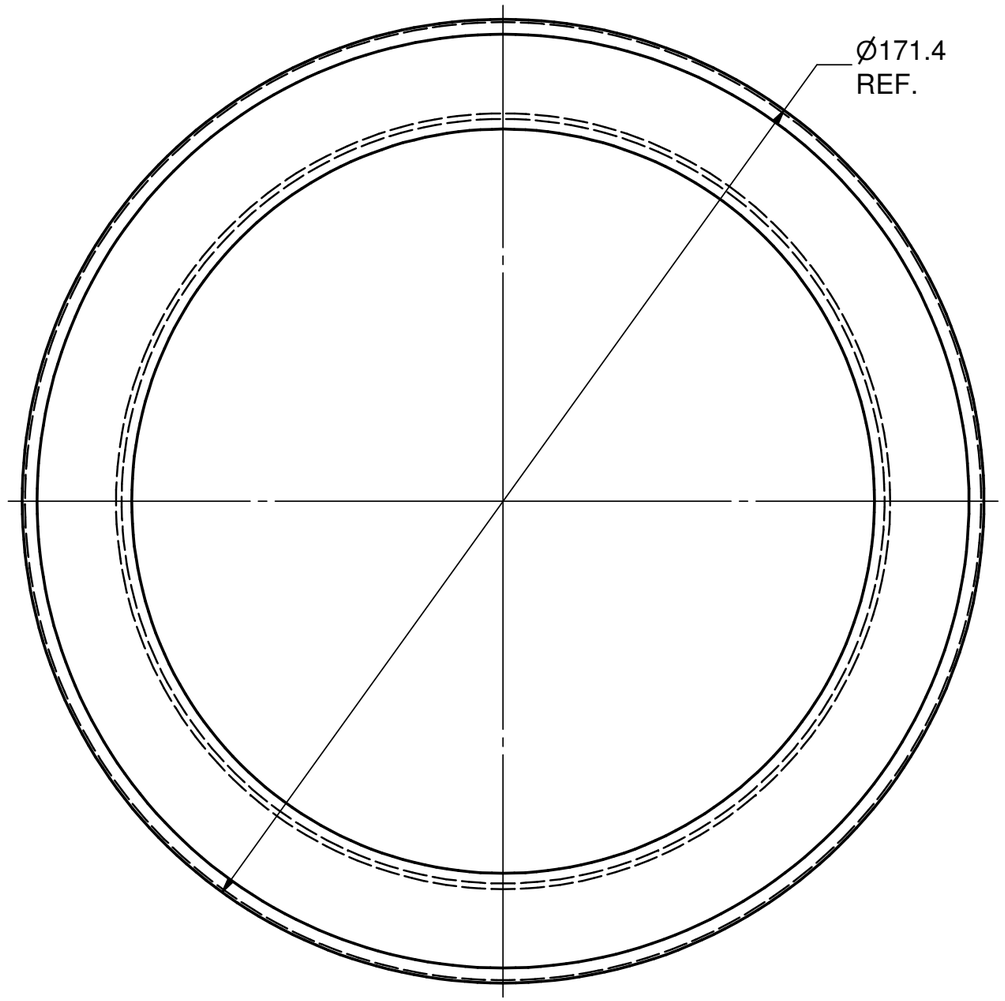

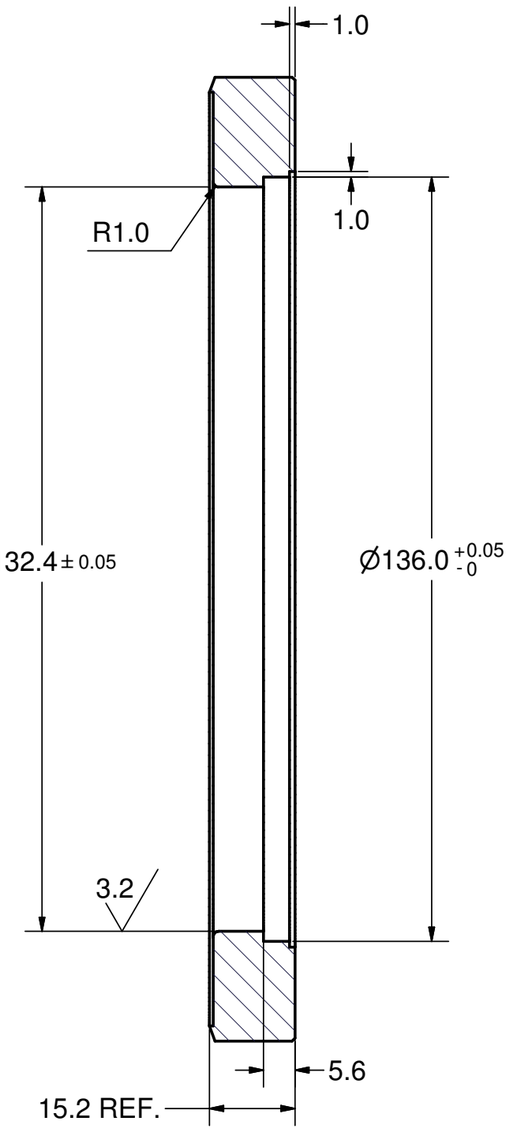

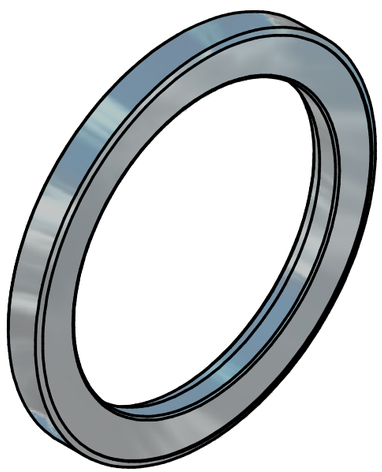

(1 : 2)

Issued all design changes as Rev C (TIO) - 4/19/07 - SAB

NOTES:

1. MAKE FROM INNER PIECE OF STANDARD 8" ROTATABLE CONFLAT FLANGE (VARIAN'S F0800-0000-RC OR EQUIVALENT). MATERIAL - 316LN STAINLESS STEEL.

	Date	Name
Drawn	9/3/05	vm
Checked	01-15-07	VM
Standard		

State	Changes	Date	Name

Rev. C

Scale : 1:1 | mat: See Note 1

ASSEMBLY : 75 kW CW Input Coupler

DESIGNATION :

8" CF FLANGE INNER PIECE

100.122.009 | 1 | A3